G20 ENGINEERING®

GAS BOILER HYDRO-BLOCK

SM - 154 - RG - SV - EFV - T

SUITABLE FOR PUMPS: AOKR - KSL - GPA - 3GS

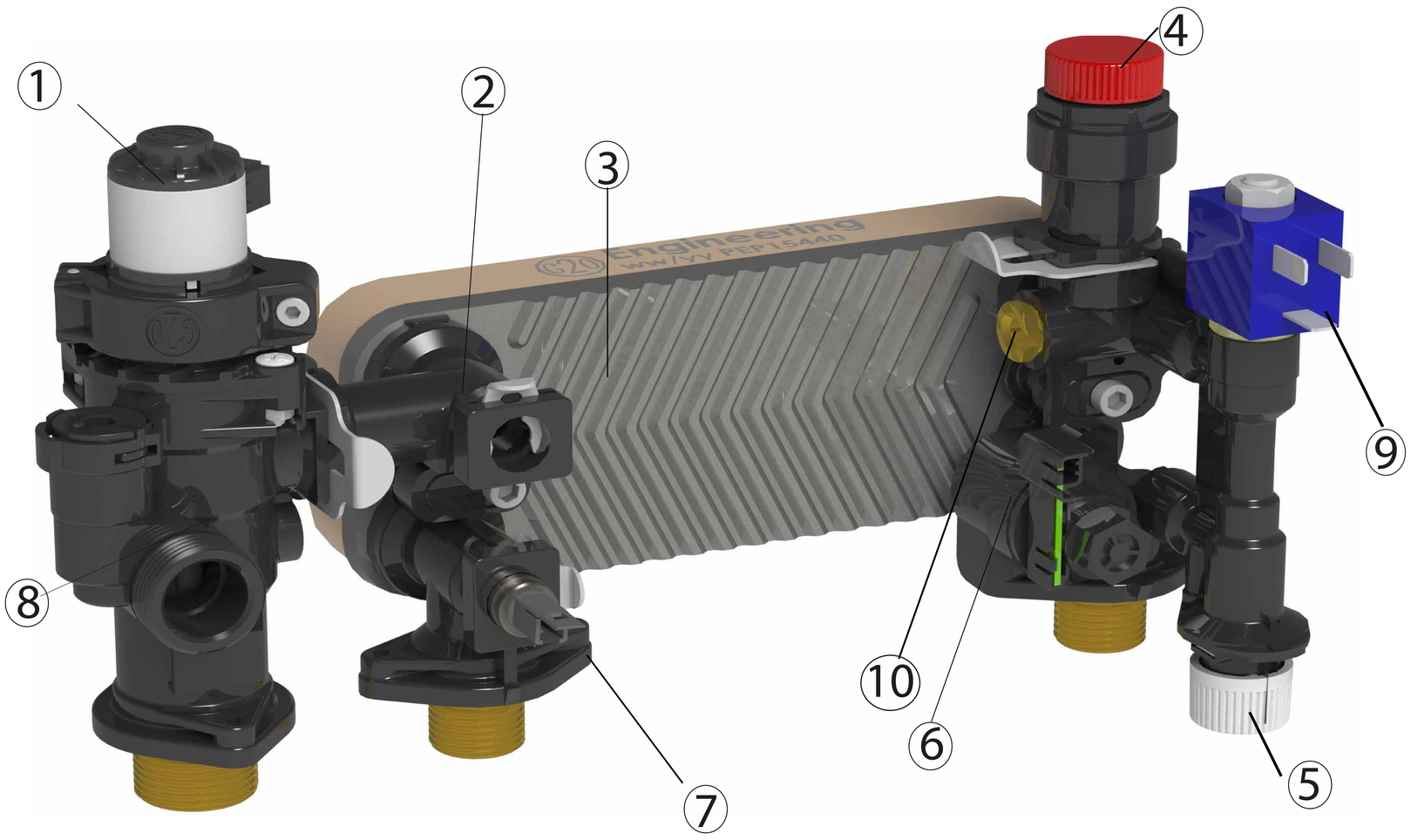

1 - 3 WAY MOTOR

2 - C.H PRESSURE PORT

3 - PLATE HEAT EXCHANGER i=154x40 mm

4 - SAFETY VALVE

5 - MANUAL FILLING VALVE

6 - D.H.W FLOW SENSOR

7 - D.H.W TEMPERATURE SENSOR

8 - AUTOMATIC BY-PASS

9 - AUTOMATIC FILLING VALVE

10 - PRESSURE GAUGE PORT

Technical features

Materials: PA6630GF - WRAS APPROVAL
POM - WRAS APPROVAL
EPDM PEROX
CW617N
STAINLESS STEEL AISI 304L

Flow detection: TURBINE HALL EFFECT

By-pass: 0,05 - 0,06 - 0,07 MPa

Water Pressure

CH circuit: max 0,3 MPa testing 0,45 MPa

DHW circuit: max 1,0 MPa testing 1,5 MPa

Max water temperature: 110°C

Hydraulic Circuit

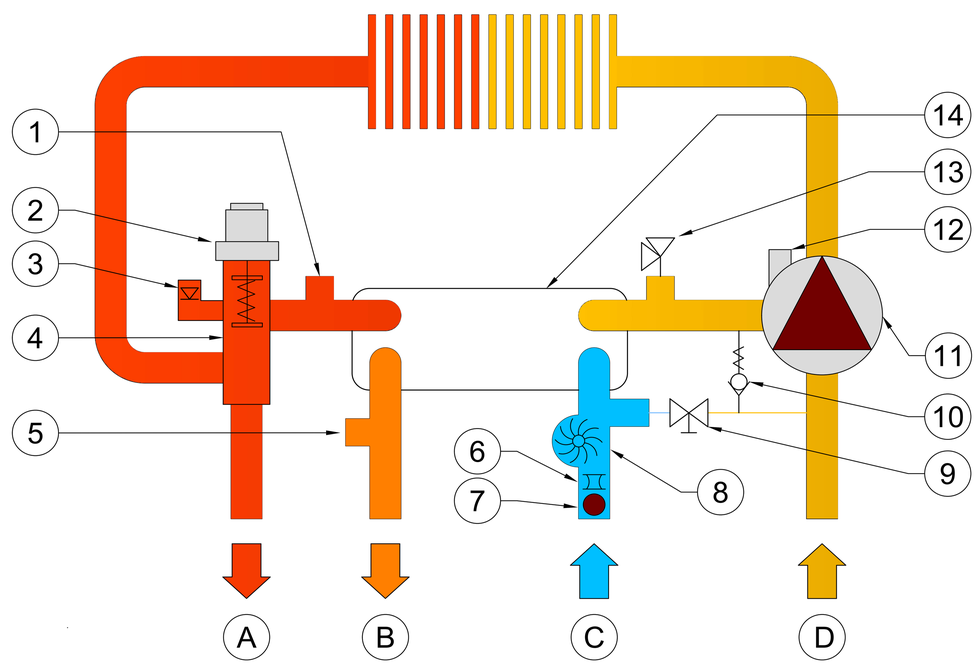

1 - PRESSURE PORT

2 - 3 WAY MOTOR

3 - AUTOMATIC BY-PASS

4 - 3 WAY VALVE

5 - NTC SENSOR CONNECTION

6 - FLOW REGULATOR

7 - DHW FILTER

8 - FLOW SENSOR

9 - FILLING VALVE

10 - BACK FLOW PREVENTER

11 - CIRCULATION PUMP

12 - EXP. VESSEL CONNECTION

13 - SAFETY VALVE

14 - PLATE HEAT EXCHANGER

A --> S.C.H

B --> D.H.W

C --> D.C.W

D --> R.C.H

Dimensions

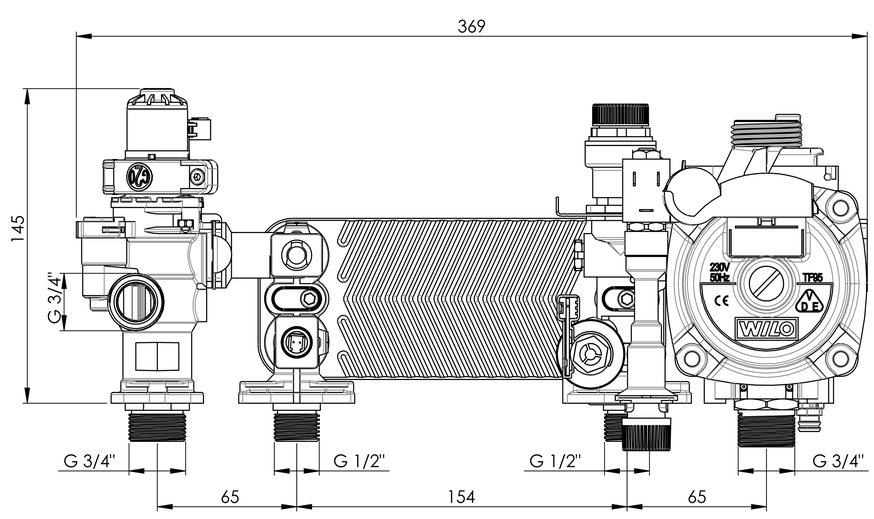

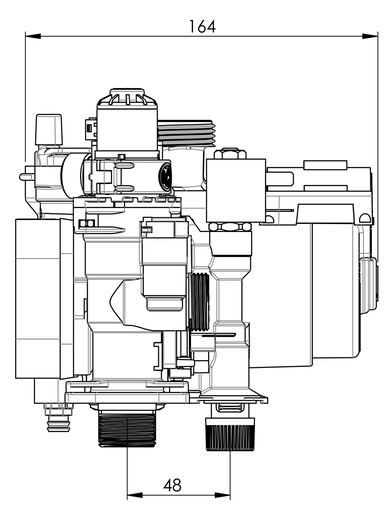

***Witdh valid for PHE 154mm.**
***Add 60mm for PHE 214mm.**
*Add 18mm for PHE 172mm

AVAILABLE FEATURES

PUMP	Standard Efficiency	High Efficiency
PRESSURE DET.	Pressure switch	Pressure sensor
DRAINING	On PRV 3BAR	On PRV 3BAR
AUTOMATIC BY-PASS	Through PHE	Through PHE
3 WAY VALVE	Stepper motor	Stepper motor
FLOW RESTRICTOR	on req. from	on req. from
FLOW DET.	HS effect flowmeters	HS effect flowmeters
TEMPERATURE SENS.	NTC w/ß=3435/3977	NTC w/ß=3435/3977
FILLING	Manual / Electric	Manual / Electric